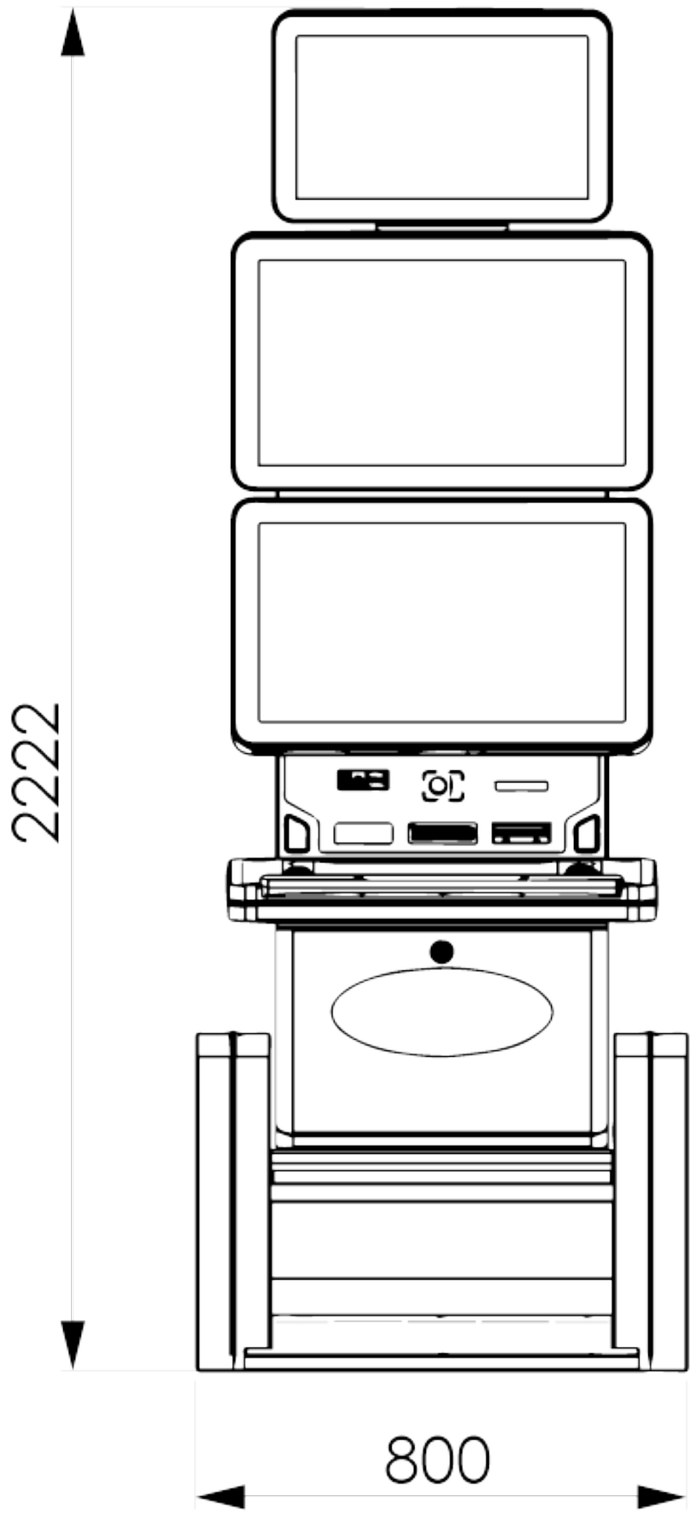

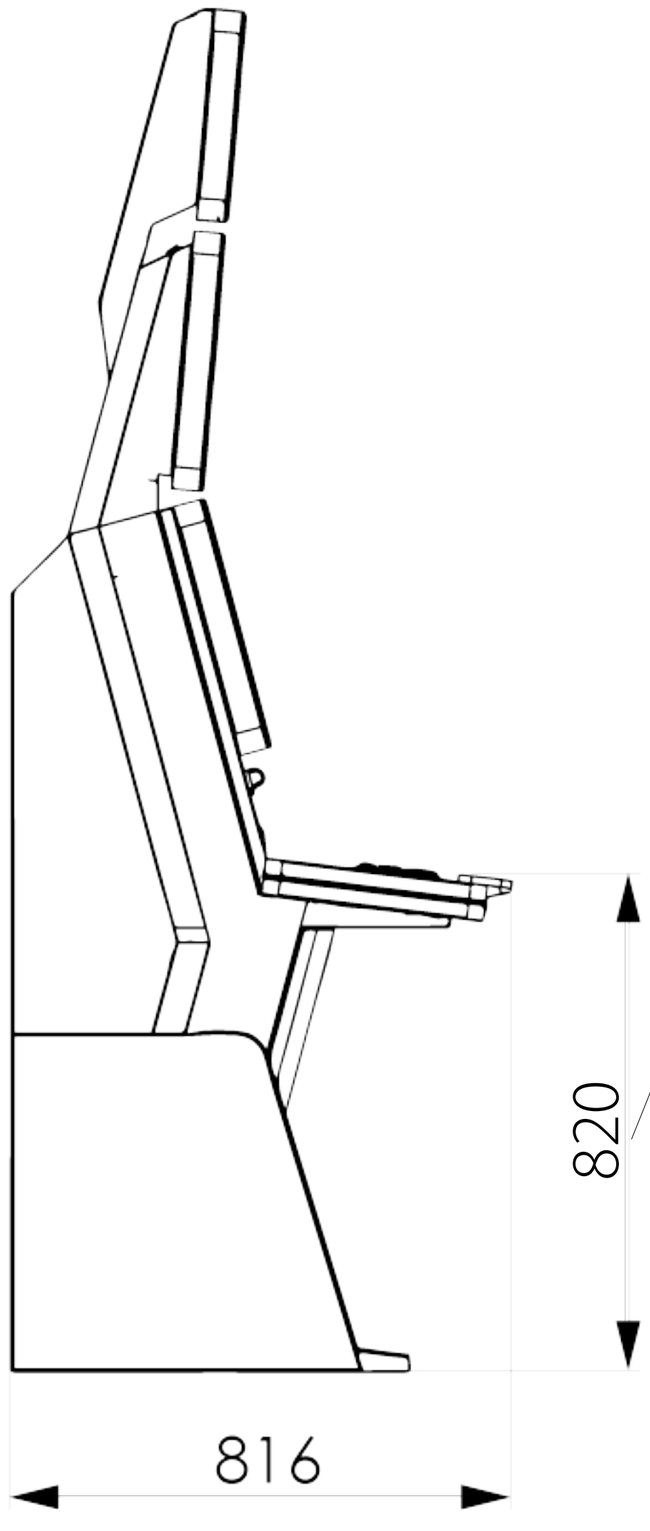

Slot Base Positions have 4 levels at 50 mm steps

Position 1 (lowest) – 770 mm
Position 2 - 820 mm
Position 3 - 870 mm
Position 4 (highest) – 920 mm